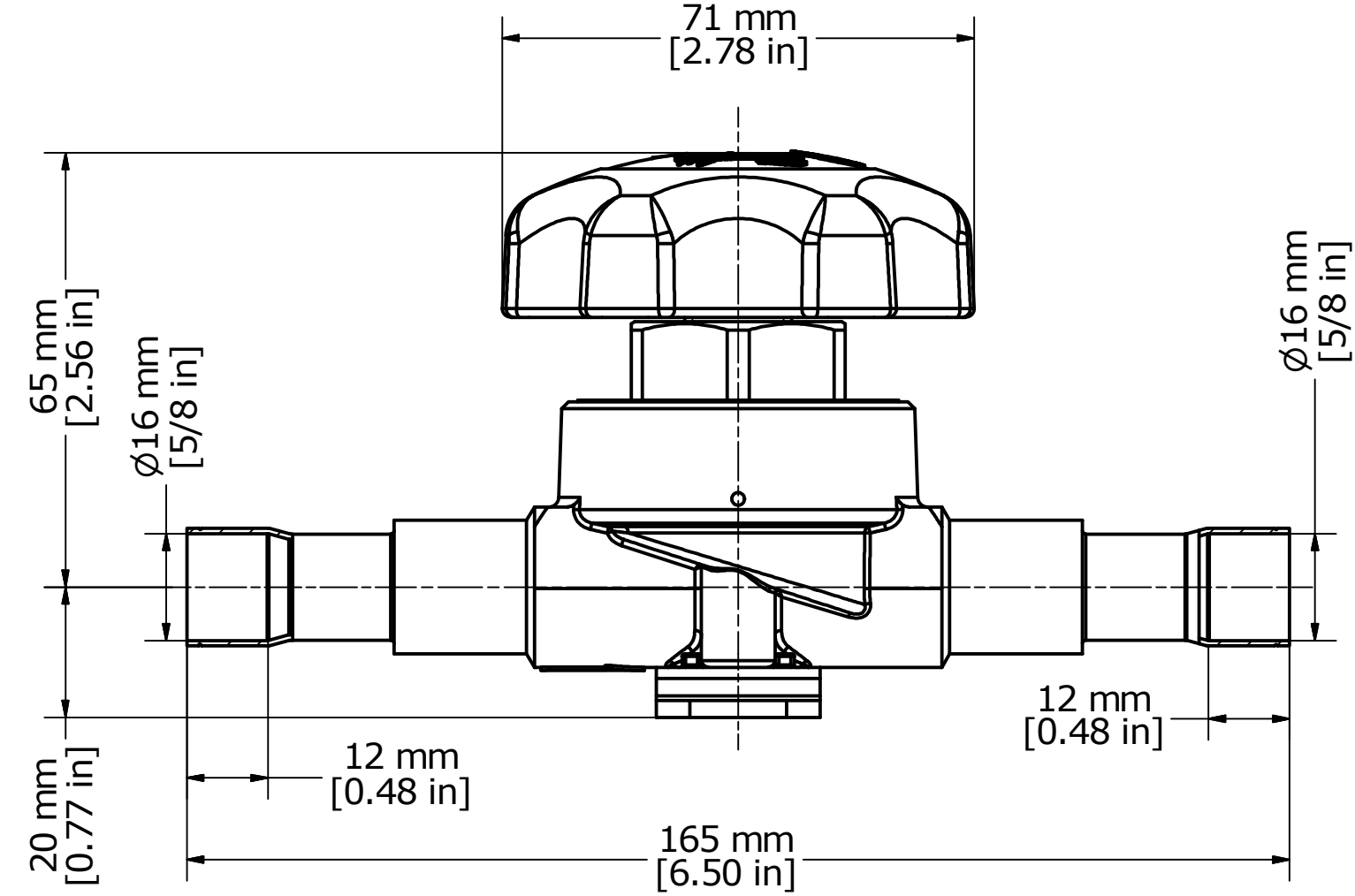

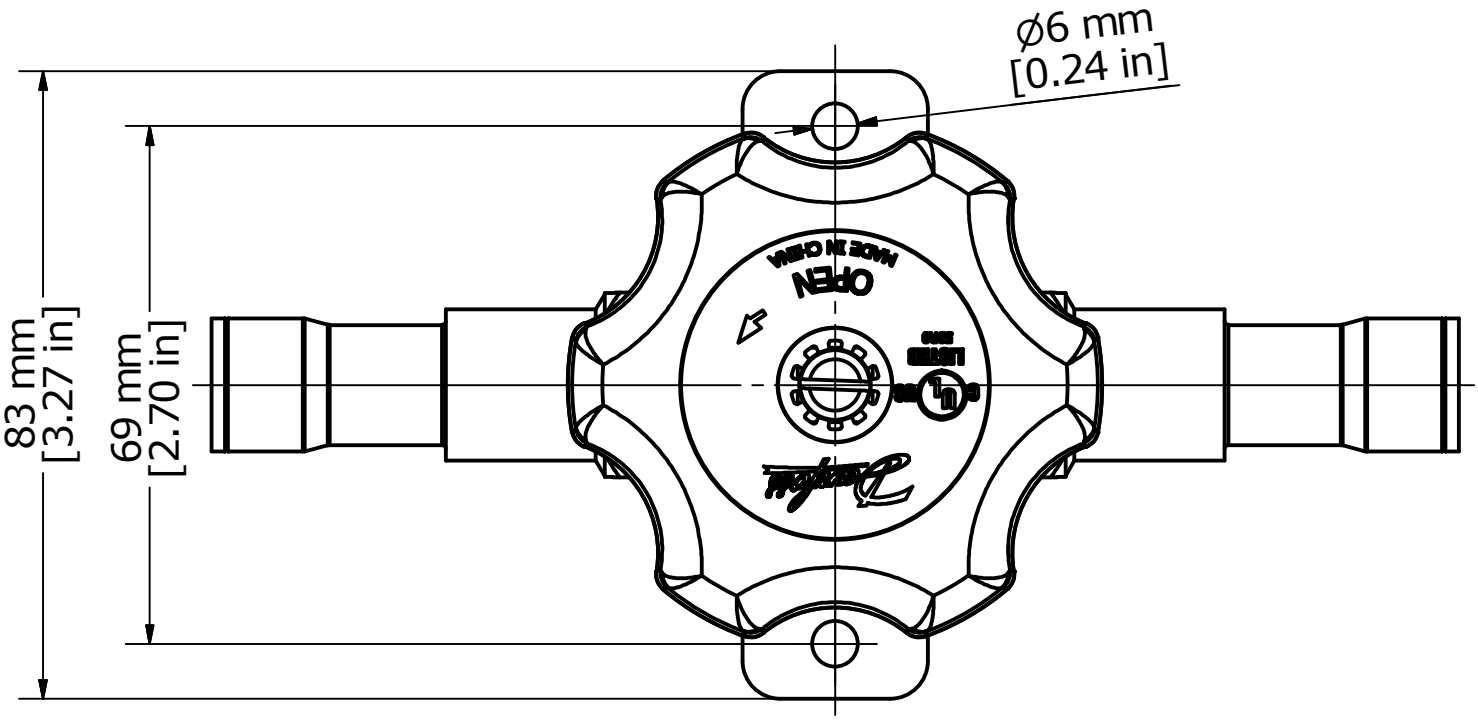

Danfoss
DIM009G9522-01