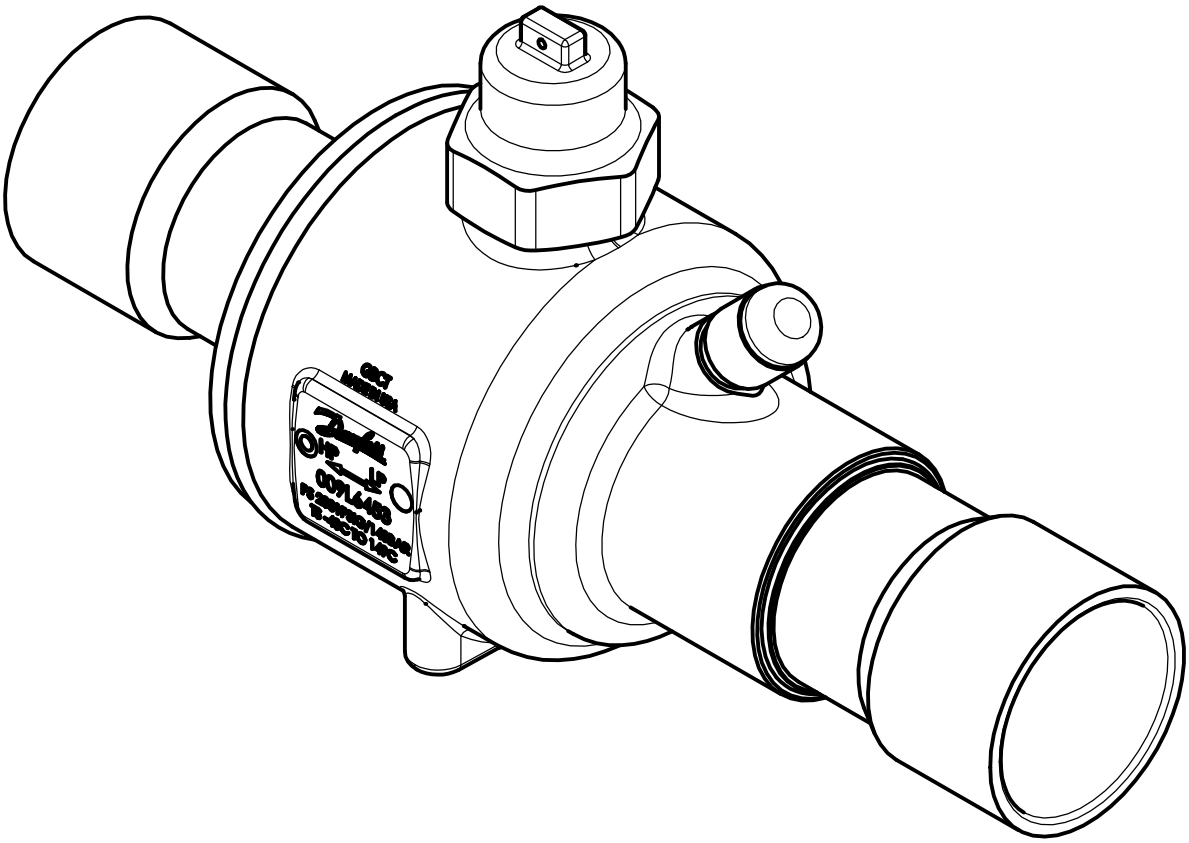

Danfoss
SYM3D_01_009L6453-01