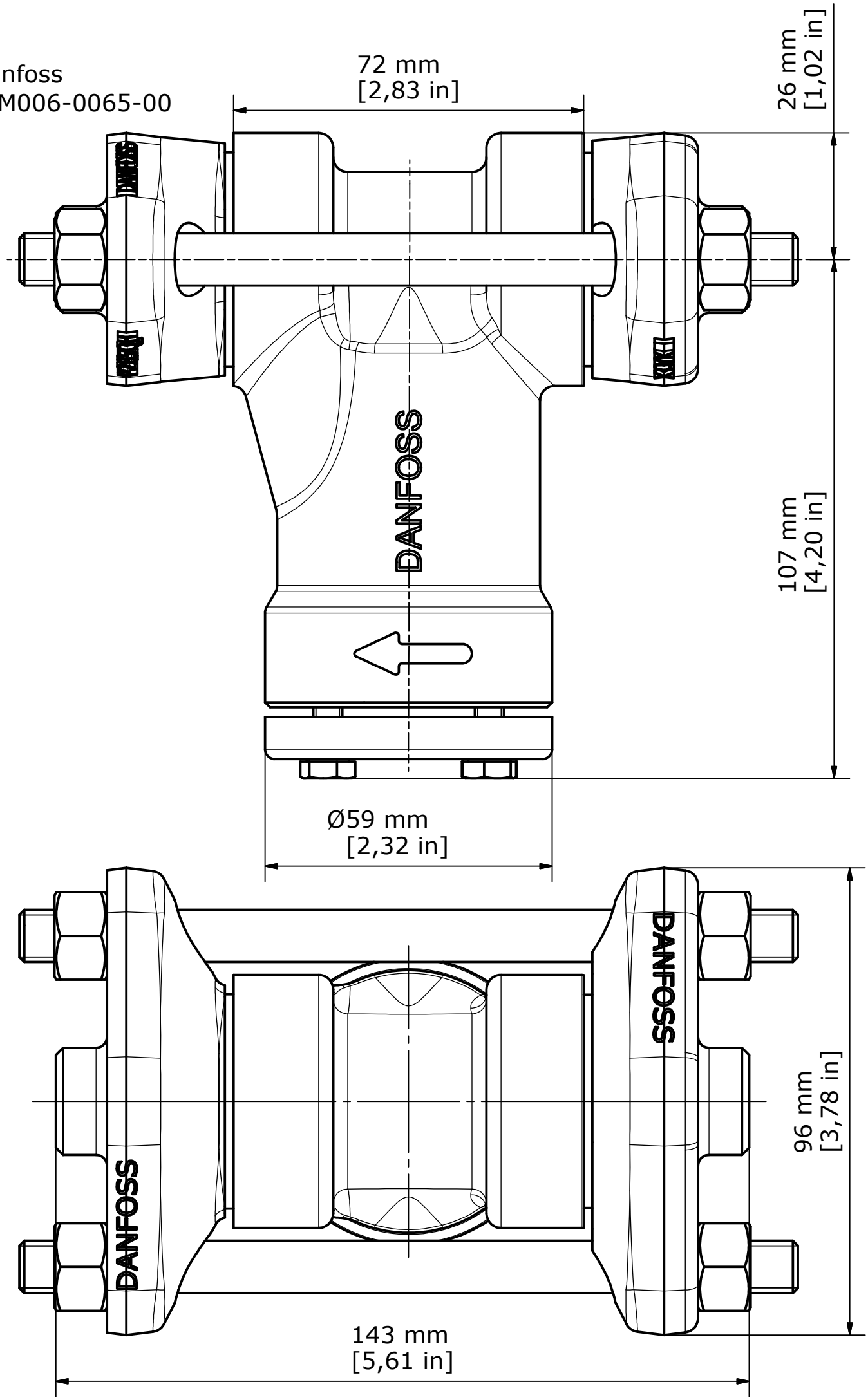Danfoss
DIM006-0065-00