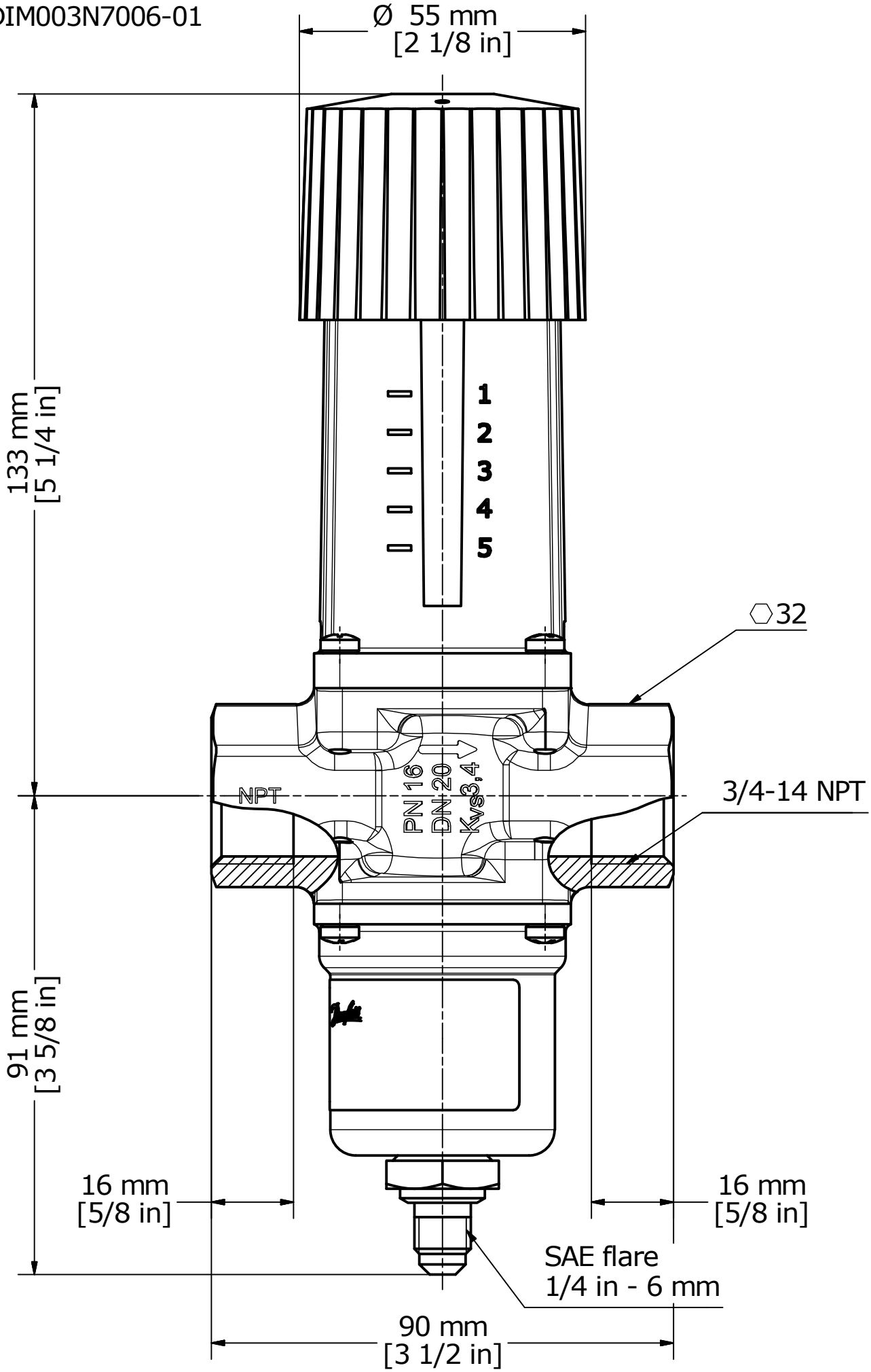Danfoss
DIM003N7006-01